RTC 8090 II SERIES

90-ton *(80.0 mt)* Rough Terrain Crane

- Full power latching boom with quick reeve boom head
- 38-140 ft *(11.6-42.7 m)* five section, full power latching boom with quick reeve boom head
- Boom wear pads have Teflon pucks that lubricate the boom sections (no grease)
- Three boom extend modes.
- No charted capacity reductions for telescoping loads.
- 35-58 ft *(10.7-17.7 m)* two piece, on-board lattice fly with 2°, 15°, 30°, and 45° offsets
- One 16 ft *(4.9 m)* lattice insert plus 58 ft *(17.7 m)* two-piece offsettable fly option
- Two 16 ft *(4.9 m)* lattice inserts plus 58 ft *(17.7 m)* two-piece offsettable fly option
- No deducts for stowed attachments
- 238 ft *(72.5 m)* maximum tip height
- 16,880 lbs *(7 656.6 kg)* maximum winch line pull
- 459 fpm *(139.9 m/min)* maximum winch line speed
- Next generation operator's cab with improved visibility and ergonomics
- 225 hp *(168kW)* Caterpillar engine with 724 ft-lbs *(981J)* of torque
- Spicer 6-speed power shift transmission
- 4x2 and 4x4 drive with 29.5x25-28PR tires
- Four steering modes: independent front, combination, crab, and independent rear
- 4 link rear suspension with optional hydro-gas suspension
- Modular counterweight design for multiple transport and lift scenarios

This information is for reference use only. Operators manual should be consulted and adhered to.
Please contact CONNELLY CRANE RENTAL at (313) 531-2700 for further information.

RTC 8090 II SERIES

90-ton *(80.0 mt)* Rough Terrain Crane

Remarkable control, reliability and capacity performance

- **Caterpillar C6.6 electronic engine** with 225 hp *(168 kW)* provides 724 lb-ft *(981 Nm)* of torque
- Electronic throttle for improved throttle response
- **Two automotive-style batteries** linked in parallel provide 700 cold cranking amps each for cold weather starting
- Rugged, lightweight **steel pontoons**
- Hydraulic disc brakes for both service brakes and parking brake
- **Metri-Pak wire harnesses** have sealed relays and connectors throughout for outstanding long-term reliability. All wires have flame retardant polyethylene insulation, resulting in a higher heat resistant wiring system.

5-section full power latching boom with attachment flexibility

- 38-140 ft *(11.6-42.7 m)* **five-section boom** with three extend modes.
- No charted capacity reductions for telescoping loads.
- **Boom wear pads** have Teflon pucks that lubricate the boom sections (no grease)
- **Maximum tip height** is 238 ft with the attachment and main boom used in combination
- Optional 35 ft *(10.7 m)* **one-piece lattice fly** and optional 35 ft to 58 ft *(10.7 m to 17.7 m)* **two-piece bi-fold lattice fly** are offsettable to 2°, 15°, 30° and 45°.
- Optional 16 ft *(4.9 m)* lattice insert used alone or with 58 ft *(17.7 m)* two-piece offsettable fly
- Optional two 16 ft *(4.9 m)* lattice inserts plus 58 ft *(17.7 m)* two-piece offsettable fly

Operator cab features

- **Extra large front window** almost seamlessly merges into the roof window
- **Sliding left side door**, right and rear windows, and swing up top window provide excellent ventilation
- **All gauges, switches, indicators, and controls** are placed in the operator's forward line of sight for excellent ergonomics
- **All gauges and switches are backlit** for excellent visibility when the cab working lights are switched to the on position
- **Integral rated capacity limiter** aids operator in safe and efficient operation by continuously monitoring boom length, boom angle, head height, radius of load, machine configuration, allowed load, and percent of allowed load.
- Available — **Integrated air conditioning** utilizes the same ventilation outlets as the standard heating system

Powerful hydraulics

- For greater productivity and control, the **five-pump hydraulic circuit** allows simultaneous function of boom hoist, winch and swing.
- Piston motor hydraulic hoist system delivers **superior hoisting**. Matched sizes of main and auxiliary winches provide equal maximum available line pulls of 16,880 lbs *(7 656.6 kg)* and maximum line speeds of 459 fpm *(140 m/min)* on 16" *(40.6 cm)* root diameter drums.

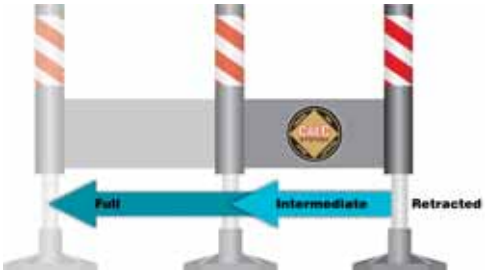

Job site maneuverability

- **CALC** — Outrigger beams have three different stages (retracted, intermediate, and fully extended) providing lifting capacities in confined areas.
- **Steering modes** are chosen and performed with the steering wheel and include independent front steer, independent rear, four wheel steer, and "crab" steering.

Link-Belt Construction Equipment Company - Lexington, Kentucky
www.linkbelt.com

® Link-Belt is a registered trademark. Copyright 2006. All rights reserved.
We reserve the right to change designs and specifications at any time.
Litho in U.S.A. 10/06 474 #4328

This information is for reference use only. Operators manual should be consulted and adhered to.
Please contact CONNELLY CRANE RENTAL at (313) 531-2700 for further information.

Technical Data

Specifications & Capacities

RTC 8090

Series II

Telescopic Boom Rough Terrain Crane

90 ton *(80.0 metric ton)*

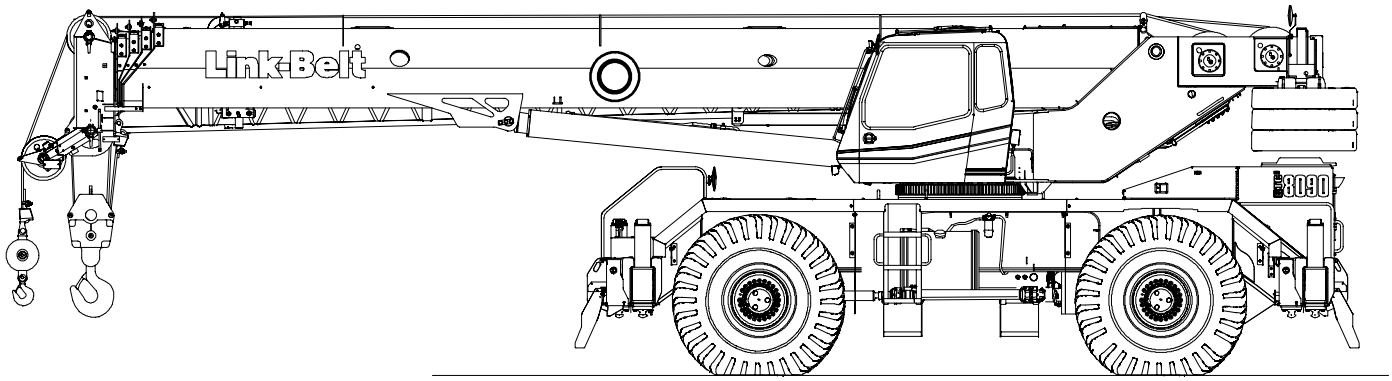

CAUTION: This material is supplied for reference use only. Operator must refer to in – cab Crane Rating Manual and Operator's Manual to determine allowable crane lifting capacities and assembly and operating procedures.

This information is for reference use only. Operators manual should be consulted and adhered to.
Please contact CONNELLY CRANE RENTAL at (313) 531-2700 for further information.

This information is for reference use only. Operators manual should be consulted and adhered to.
Please contact CONNELLY CRANE RENTAL at (313) 531-2700 for further information.

Table Of Contents

Boom, Attachments, and Upper Structure 1
Boom 1
Boom Wear Pads 1
Boom Head 1
Boom Elevation 1
Auxiliary Lifting Sheave – Optional 1
Hook Blocks and Balls – Optional 1
Fly – Optional 1
Fly Extensions – Optional 1
Operator's Cab and Controls 1
Swing 2
Electrical 2
Load Hoist System 3
Load Hoist Performance 3
2M Main and Optional Auxiliary Winches 3
Hydraulic System 3
Counterweight 3
Carrier 4
General 4
Outriggers 4
Steering and Axles 4
Suspension 4
Tires and Wheels 4
Brakes 4
Electrical 4
Engine 4
Transmission 4
Carrier Speeds and Gradeability 5
Fuel Tank 5
Hydraulic System 5
Pump Drive 5
Axle Loads 6
General Dimensions 7
Working Range Diagram 8
Boom Extend Modes 9
Main Boom Lift Capacity Charts – Standard 10
19,200 lb Counterweight – Fully Extended Outriggers – 360˚ Rotation 10
19,200 lb Counterweight – On Tires – Stationary – Boom Centered Over Front Between Tire Tracks 11
19,200 lb Counterweight – On Tires – Pick & Carry (Creep) – Boom Centered Over Front 12
19,200 lb Counterweight – On Tires – Stationary – 360˚ Rotation 12
28,800 lb Counterweight – Fully Extended Outriggers – 360˚ Rotation 13

This information is for reference use only. Operators manual should be consulted and adhered to.
Please contact CONNELLY CRANE RENTAL at (313) 531-2700 for further information.

Fly Attachment Lift Capacity Charts – Optional **14**
19,200 lb Counterweight – Fully Extended Outriggers – 360˚ Rotation 14
140 ft Main Boom Length – 2˚ Fly Offset 14
140 ft Main Boom Length – 15˚ Fly Offset 14
140 ft Main Boom Length – 30˚ Fly Offset 15
140 ft Main Boom Length – 45˚ Fly Offset 15
28,800 lb Counterweight – Fully Extended Outriggers – 360˚ Rotation 16
140 ft Main Boom Length – 2˚ Fly Offset 16
140 ft Main Boom Length – 15˚ Fly Offset 16
140 ft Main Boom Length – 30˚ Fly Offset 17
140 ft Main Boom Length – 45˚ Fly Offset 17
Main Boom Lift Capacity Charts – Metric **18**
8 709kg Counterweight – Fully Extended Outriggers – 360˚ Rotation 18
8 709kg Counterweight – On Tires – Stationary – Boom Centered Over Front Between Tire Tracks . 19
8 709kg Counterweight – On Tires – Pick & Carry (Creep) – Boom Centered Over Front 20
8 709kg Counterweight – On Tires – Stationary – 360˚ Rotation 20
13 064kg Counterweight – Fully Extended Outriggers – 360˚ Rotation 21
Fly Attachment Lift Capacity Charts – Optional **22**
8 709kg Counterweight – Fully Extended Outriggers – 360˚ Rotation 22
42.67m Main Boom Length – 2˚ Fly Offset 22
42.67m Main Boom Length – 15˚ Fly Offset 22
42.67m Main Boom Length – 30˚ Fly Offset 23
42.67m Main Boom Length – 45˚ Fly Offset 23
13 064kg Counterweight – Fully Extended Outriggers – 360˚ Rotation 24
42.67m Main Boom Length – 2˚ Fly Offset 24
42.67m Main Boom Length – 15˚ Fly Offset 24
42.67m Main Boom Length – 30˚ Fly Offset 25
42.67m Main Boom Length – 45˚ Fly Offset 25

Boom, Attachments, and Upper Structure

■ Boom

Design – Five section, formed construction of extra high tensile steel consisting of one base section and four telescoping sections. The two plate design of each section has multiple longitudinal bends for superior strength. Each telescoping section extends independently by means of one double–acting, single stage hydraulic cylinder with integrated holding valves.

Boom

- 38–140 ft (*11.6–42.7m*) five section boom
- Three boom extend modes (EM1 through EM3), controlled from the operator's cab, provide superior capacities by varying the extension of the telescoping sections:
  - EM1 extends to 140.0 ft (*42.7m*)
  - EM2 extends to 115.8 ft (*35.3m*)
  - EM3 extends to 76.5 ft (*23.3m*)
- Mechanical boom angle indicator
- Maximum tip height for each extend mode is:
  - EM1 is 149 ft 7 in (*45.6m*)
  - EM2 is 125 ft 9 in (*38.3m*)
  - EM3 is 87 ft 1 in (*26.5m*)

Boom Wear Pads

- Wear pads with Teflon inserts that self–lubricate the boom sections
- Bottom wear pads are universal for all boom sections
- Top wear pads are universal for all boom sections

Boom Head

- Five 16.5 in (*41.9cm*) root diameter nylon sheaves to handle up to ten parts of line
- Easily removable wire rope guards
- Rope dead end lugs on each side of the boom head
- Boom head is designed for quick–reeve of the hook block

Boom Elevation

- One double acting hydraulic cylinder with integral holding valve
- Boom elevation: –3˚ to 80˚

Auxiliary Lifting Sheave – Optional

- Single 16.5 in (*41.9m*) root diameter nylon sheave
- Easily removable wire rope guards
- Does not affect erection of the fly or use of the main head sheaves

Hook Blocks and Balls – Optional

- 40 ton (*36.3mt*) 4 sheave quick–reeve hook block with safety latch
- 60 ton (*54.4mt*) 4 sheave quick–reeve hook block with safety latch
- 80 ton (*72.5mt*) 5 sheave quick–reeve hook block with safety latch
- 90 ton (*80.0mt*) 6 sheave quick–reeve hook block with safety latch
- 8.5 ton (*7.7mt*) swivel and non–swivel hook balls with safety latch
- 10 ton (*9.1mt*) swivel and non–swivel hook balls with safety latch

Fly – Optional

- 35 ft (*10.7m*) one piece lattice fly, stowable, offsettable to 2˚, 15˚, 30˚, and 45˚. Maximum tip height is 184 ft 2 in (*56.1m*).
- 35 ft–58 ft (*10.7–17.7m*) two piece bi–fold lattice fly, stowable, offsettable to 2˚, 15˚, 30˚, and 45˚. Maximum tip height is 206 ft 8 in (*63.0m*).

Fly Extensions – Optional

- One 16 ft (*4.9m*) lattice extension, equipped with two 16.5 in (*41.9cm*) root diameter nylon sheaves, to be mounted between the boom head and fly options. Maximum tip height is 222 ft 4 in (*67.8m*).
- Two 16 ft (*4.9m*) lattice extensions, one equipped with two 16.5 in (*41.9cm*) root diameter nylon sheaves, to be mounted between the boom head and fly options. Maximum tip height is 238 ft 2 in (*72.6m*). Minimum of 19,200 lb (*8 700kg*) of counterweight required.

■ Operator's Cab and Controls

Environmental Cab – Fully enclosed, one person cab of galvaneal steel structure with acoustical insulation
Equipped with:

- Tinted and tempered glass windows
- Extra–large fixed front window with windshield wiper and washer
- Swing up roof window with windshield wiper
- Sliding left side door with large fixed window
- Sliding rear and right side windows for ventilation
- Six way adjustable, cushioned seat with seat belt and storage compartment
- Diesel fired warm–water heater with air ducts for front windshield defroster and cab floor
- Defroster fan for the front window
- Bubble level
- Circulating fan
- Adjustable sun visor
- Dome light
- Cup holder
- Fire extinguisher
- Left side viewing mirror
- Two position travel swing lock

Air Conditioning – Optional – Integral with cab heating system utilizing the same ventilation outlets

Engine Dependant Warm–Water Heater – Optional – With air ducts for front windshield defroster and cab floor

This information is for reference use only. Operators manual should be consulted and adhered to.
Please contact CONNELLY CRANE RENTAL at (313) 531-2700 for further information.

Steering Column – Pedestal type with tilt and telescope functions for operator comfort. Column includes the following controls and indicators:

Left and right levers include:
- Horn button
- Turn signal switch
- Driving light switch
- Transmission direction switch

Panel mounted switches for:
- Travel park brake
- Steer mode selector
- 2/4 wheel drive/range selector
- Transmission gear selector
- Hazard flasher

Panel mounted indicator/warning lights for:
- Transmission temperature
- Engine oil pressure
- Travel park brake
- Service brake
- Turn signals
- Rear wheel offset–optional
- Emergency steer – optional

Armrest Controls – Two dual axis hydraulic joystick controllers or optional single axis hydraulic controllers for:
- Swing
- Boom hoist
- Main rear winch
- Auxiliary front winch – optional
- Drum rotation indication
- Drum rotation indicator activation switch
- Winch high/low speed and disable switch(es)
- Warning horn button
- Swing park brake

Outrigger Controls – Hand held control box with umbilical cord gives the operator the freedom to view operation while setting the outriggers.

Foot Controls
- Boom telescope
- Swing brake
- Engine throttle
- Service brake

Right Front Console – Controls and indicators for:
- Engine ignition
- Engine throttle lock
- Function disable
- Front windshield wiper and washer
- Cab floodlights
- Warning horn
- Heating controls
- Console dimmer switch
- Bubble level
- 12 volt power connection
- Air conditioning – optional
- Boom floodlight – optional
- Rotating beacon/Strobe light – optional
- Third wrap indicator – optional

Cab Instrumentation – Ergonomically positioned, analog instrumentation for crane operation including:
- Engine coolant temperature with warning indicator
- Hydraulic oil temperature with warning indicator
- Fuel level with warning indicator
- Tachometer
- Transmission temperature with warning indicator
- Voltmeter with warning indicator

Rated Capacity Limiter – Microguard graphic audio–visual warning system integrated into the dash with anti–two block and function limiter. Operating data available includes:
- Crane configuration
- Boom length and angle
- Boom head height
- Allowed load and % of allowed load
- Boom angle
- Radius of load
- Actual load
- Operator settable alarms (include):
  - Maximum and minimum boom angles
  - Maximum tip height
  - Maximum boom length
  - Swing left/right positions
  - Operator defined area (imaginary plane)

Integrated Third Wrap Indicator – Optional – Microguard color display visually and audibly warns the operator when the wire rope is on the first/bottom layer and when the wire rope is down to the last three wraps.

Internal RCL Light Bar – Optional – Visually informs the operator when crane is approaching maximum load capacity with a series of green, yellow, and red lights.

External RCL Light Bar – Optional – Visually informs the ground crew when crane is approaching maximum load capacity with a series of green, yellow, and red lights.

■ Swing

Motor/Planetary – Bi–directional hydraulic swing motor mounted to a planetary reducer for 360˚ continuous smooth swing at 1.9 rpm

Swing Park Brake – 360˚, electric over hydraulic, (spring applied/hydraulic released) multi–disc brake mounted on the speed reducer. Operated by a switch from the operator's cab.

Swing Brake – 360˚, foot operated, hydraulic applied disc brake mounted to the speed reducer

Swing Lock – Two–position swing lock (boom over front or rear) operated from the operator's cab

360˚ Positive Swing Lock – Optional – Meets New York City requirement

■ Electrical

Swing Alarm – Audio warning device signals when the upper is swinging.

Lights
- Two working lights on front of the cab
- One rotating amber beacon on top of the cab – optional
- One amber strobe beacon on top of the cab – optional
- Boom floodlight – optional

Load Hoist System

Load Hoist Performance

Main (Rear) and Auxiliary (Front) Winches – 3/4 in (*19mm*) Rope										
	Maximum Line Pull		Normal Line Speed		High Line Speed		Layer		Total	
Layer	lb	*kg*	ft/min	*m/min*	ft/min	*m/min*	ft	*m*	ft	*m*
1	16,880	*7 656.6*	172	*52.4*	341	*104.0*	114	*34.7*	114	*34.7*
2	15,519	*7 039.3*	187	*57.0*	371	*113.1*	124	*37.8*	238	*72.5*
3	14,362	*6 514.5*	202	*61.6*	401	*122.2*	134	*40.8*	372	*113.4*
4	13,365	*6 062.3*	217	*66.1*	430	*131.1*	144	*43.9*	516	*157.3*
5	12,497	*5 668.5*	232	*70.7*	460	*140.2*	154	*46.9*	670	*204.2*
6	– – –	– – –	– – –	– – –	– – –	– – –	164	*50.0*	834	*254.2*

Wire Rope Application		Diameter		Type	Maximum Permissible Load	
		in	*mm*		lb	*kg*
Main (Rear) Winch	Standard	3/4	*19*	4 strand, low torque, right regular lay (Type GC)	22,400	*10 160.5*
	Optional	3/4	*19*	18x19 rotation resistant – right regular lay (Type RB)	12,920	*5 860.5*
	Optional	3/4	*19*	36x7 rotation resistant – right regular lay (Type ZB)	15,600	*7 076.2*
Auxiliary (Front) Winch	Standard	3/4	*19*	4 strand, low torque, right regular lay (Type GC)	22,400	*10 160.5*
	Optional	3/4	*19*	18x19 rotation resistant – right regular lay (Type RB)	12,920	*5 860.5*
	Optional	3/4	*19*	36x7 rotation resistant – right regular lay (Type ZB)	15,600	*7 076.2*

2M Main and Optional Auxiliary Winches

- Axial piston, full and half displacement (2–speed) motors driven through planetary reduction unit for positive control under all load conditions.
- Grooved lagging
- Power up/down mode of operation
- Hoist drum cable follower – optional
- Drum rotation indicator
- Drum diameter: 16 in (*40.6cm*)
- Rope length:
  - Main: 730 ft (*222.5m*)
  - Auxiliary: 500 ft (*152.4m*) or 730 ft (*222.5m*)
- Maximum rope storage: 834 ft (*254.2m*)
- Terminator style socket and wedge

Third wrap indicator – optional – Visually and audibly warns the operator when the wire rope is on the first/bottom layer and when the wire rope is down to the last three wraps

Hydraulic System

Counterbalance Valves – All hoist motors, boom extend cylinders, and boom hoist cylinders are equipped with counterbalance valves to provide load lowering and prevents accidental load drop when hydraulic power is suddenly reduced.

Hydraulic Oil Coolers – Two carrier mounted coolers remove heat from the hydraulic oil. One is integral to the engine radiator/charge air cooler and the other is mounted on left side of the carrier.

Counterweight

Standard – Total of 19,200 lb (*8 709.0kg*) counterweight consisting of two counterweights pinned to the upper with capacities for:

- 0 lb (*0kg*) counterweight*
- 9,600 lb (*4 354.5kg*) counterweight
- 19,200 lb (*8 709.0kg*) counterweight

Optional – 9,600 lb (*4 354.5kg*) in addition to standard counterweight for a total of 28,800 lb (*13 063.0kg*) counterweight with capacities for:

- 0 lb (*0kg*) counterweight*
- 9,600 lb (*4 354.5kg*) counterweight
- 19,200 lb (*8 709.0kg*) counterweight
- 28,800 lb (*13 063.0kg*) counterweight*

* Travel speed limited to 5 mph.

Optional – Hydraulic counterweight removal activated by a hand–held controller with enough cable to access the pins on each side of the counterweights.

This information is for reference use only. Operators manual should be consulted and adhered to.
Please contact CONNELLY CRANE RENTAL at (313) 531-2700 for further information.

Carrier

General

- 10 ft 9 in (*3.28m*) wide
- 14 ft 4 in (*4.37m*) wheelbase (centerline of first axle to centerline of second axle)

Frame – Box–type, torsion resistant, welded construction made of high tensile steel. Equipped with front and rear towing and tie–down lugs, tow connections, and access ladders.

Outriggers

Boxes – Two double box, front and rear welded to carrier frame

Beams and Jacks – Four single stage beams with Confined Area Lifting Capacities (CALC™) provide selectable outrigger extensions of full, intermediate, and retracted. Hydraulically controlled from the operator's cab with integral check valves.

Pontoons – Four lightweight, quick release, 23.5 x 23.5 in (*59.7 x 59.7cm*), steel pontoons with contact area of 460 in^2 (*2 968*cm^2) can be stored for road travel in storage racks on the carrier.

Main Jack Reaction – 108,000 lb (*48 988kg*) force and 235 psi (*1 620kPa*) ground bearing pressure

Steering and Axles

Steering – Four independent modes consisting of two wheel front, two wheel rear, four wheel, and crab. Each mode is controlled from the steering wheel and is selected by a switch in the operator's cab.

Drive – Two modes: 4 x 2 and 4 x 4 for off highway travel

Axle 1 – Steered, non–driven for 4 x 2 and steered, driven for 4 x 4

Axle 2 – Steered, driven

Suspension

Front – Rigid mount to the carrier frame

Rear – The rear axle is suspended on the oscillation cylinders with motion of the axle controlled by a four bar linkage system. The oscillation cylinders lockout when the upper structure rotates 2.5˚ past centerline.

- Hydro–gas rear suspension – optional

Ride Height Adjustment – Suspension can be lowered for transport using a hand–held controller from level ground.

Tires and Wheels

Front and Rear – Four (single) 29.5 x 25–28 ply rating, earthmover type tires on steel disc wheels

- Spare tires and wheels – optional

Brakes

Service – Full hydraulic, dual circuit, disc type brakes on all wheel ends

Parking/Emergency – Spring applied type, acting on front axle

Electrical

Two batteries provide 12 volt starting and operation

Lights

- Front lighting includes two main headlights and two parking/directional indicators.
- Side lighting includes two parking/directional indicators per side.
- Rear lighting includes two parking/directional indicators, two parking/brake lights, and two reversing lights.
- Other equipment includes hazard/warning system, cab light, instrument panel light, and signal horn.

Engine

Specification	CAT C6.6
Numbers of Cylinders	6
Cycle	4
Bore and Stroke: inch (*mm*)	4.13 x 5.00 (*105 x 127*)
Piston Displacement: in^3 (*L*)	403 (*6.6*)
Max. Brake Horsepower: hp (*kW*)	225 (*167.8*) @ 2,200 rpm
Peak Torque: ft lb (*Nm*)	727 (*986*) @ 1,400 rpm
Alternator: volts – amps	12 – 150
Crankcase Capacity: qt (*L*)	18.4 (*17.4*)
• Mechanically driven fan and thermostatically controlled radiator	

Transmission

Powershift – Three speed with high/low range for 6 forward and 6 reverse gears. Front axle disconnect for two or four wheel drive. Front axle disconnects in high range.

Carrier Speeds and Gradeability

Spicer			Speed		Gradeability (@ stall)
Gear		Ratio	mph	*km/h*	% Grade
6th	Forward & Reverse 2WD/Hi	0.82	19.8	*31.9*	2.4
5th		2.25	8.1	*13.0*	10.2
4th		4.67	4.0	*6.4*	23.8
3rd	Forward & Reverse 4WD/Low	2.4	7.6	*12.3*	11.0
2nd		6.54	2.9	*4.7*	35.2
1st		13.6	1.4	*2.3*	101.2

Based on a gross vehicle weight of 105,500 lb (*47 854kg*).

Crane operating angle must not exceed 35˚ (77% grade).

Fuel Tank

One 75 gallon (*283.9L*) capacity tank

Hydraulic System

All functions are hydraulically powered allowing positive precise control with independent or simultaneous operation of all functions.

Main Pumps

- One two section fixed displacement gear pump for the front/rear winches and boom hoist/telescope circuits.
- One two section fixed displacement gear pump for the swing/steering and outrigger/telescope/service brake/oscillation circuits.
- One single section gear pump for an additional supply to the front/rear winch circuit.
- Combined pump capacity of 138 gpm (*522.4Lpm*)

Hydraulic Reservoir – 153 gal (*579.2L*) capacity equipped with sight level gauge. Diffusers built in for deaeration.

Filtration – One 10 micron, full flow return line filter. Accessible for easy filter replacement.

Pump Drive

One pump is mounted on the engine with the rest being transmission mounted. All pumps are mechanically driven by the diesel engine.

- Front/rear winches and boom hoist/telescope pump can be disconnected with a manual pump disconnect to aid in cold weather starting – optional.

This information is for reference use only. Operators manual should be consulted and adhered to.
Please contact CONNELLY CRANE RENTAL at (313) 531-2700 for further information.

Axle Loads

Base crane with zero counterweight and full tank of fuel	Gross Vehicle Weight (1)		Upper Facing Front				Upper Facing Rear			
			Front Axles		Rear Axles		Front Axles		Rear Axles	
	lb	*kg*	lb	*kg*	lb	*kg*	lb	*kg*	lb	*kg*
	79,919	*36 251*	51,085	*23 172*	28,834	*13 079*	22,585	*10 245*	57,334	*26 007*
Pintle hook, front	13	*6*	17	*8*	−5	*−2*	17	*8*	−5	*−2*
Pintle hook, rear	13	*6*	−5	*−2*	18	*8*	−5	*−2*	18	*8*
Rear steer indicator	6	*3*	0	*0*	6	*3*	0	*0*	6	*3*
Hydro−gas suspension	56	*25*	20	*9*	36	*16*	20	*9*	36	*16*
Pump disconnect	39	*18*	7	*3*	32	*15*	7	*3*	32	*15*
Operator in cab	250	*113*	140	*64*	110	*50*	110	*50*	140	*64*
Hoist drum follower − main	69	*31*	−24	*−11*	93	*42*	93	*42*	−24	*−11*
Auxiliary winch with 500 ft (*152.4m*) wire rope	608	*276*	−74	*−34*	682	*309*	682	*309*	−74	*−34*
Hoist drum follower − auxiliary	69	*31*	−6	*−3*	75	*34*	75	*34*	−6	*−3*
Substitute 500 ft (*152.4m*) wire rope with 730 ft (*222.5m*) − auxiliary	288	*131*	−9	*−4*	297	*135*	297	*135*	−9	*−4*
Remove 730 ft (*222.5m*) wire rope from rear (main) winch	−931	*−422*	203	*92*	−1,134	*−514*	−1,134	*−514*	203	*92*
Remove 500 ft (*152.4m*) wire rope from front (auxiliary) winch	−643	*−292*	21	*10*	−664	*−301*	−664	*−301*	21	*10*
Counterweight removal	208	*94*	−62	*−28*	270	*122*	270	*122*	−62	*−28*
One slab of counterweight on upper	9,600	*4 355*	−3,356	*−1 522*	12,956	*5 877*	12,956	*5 877*	−3,356	*−1 522*
Two slabs of counterweight on upper	19,200	*8 709*	−6,712	*−3 045*	25,912	*11 754*	25,912	*11 754*	−6,712	*−3 045*
Three slabs of counterweight on upper	28,800	*13 064*	−10,068	*−4 567*	38,868	*17 630*	38,868	*17 630*	−10,068	*−4 567*
Emergency steering	255	*116*	39	*18*	216	*100*	216	*100*	39	*18*
360° mechanical swing lock	140	*64*	72	*33*	68	*31*	68	*31*	72	*33*
Air conditioning	179	*81*	50	*23*	129	*59*	129	*59*	50	*23*
Floodlight to front of boom base section	7	*3*	10	*5*	−3	*−1*	−3	*−1*	10	*5*
Fly mounting brackets to boom base section for fly options	176	*80*	239	*108*	−63	*−29*	−63	*−29*	239	*108*
35 ft (*10.67m*) offsettable fly − stowed	1,591	*722*	2,576	*1 168*	−984	*−446*	−984	*−446*	2,576	*1 168*
35−58 ft (*10.67−17.68m*) offsettable fly − stowed	2,263	*1 026*	3,257	*1 477*	−994	*−451*	−994	*−451*	3,257	*1 477*
Auxiliary lifting sheave	110	*50*	304	*138*	−194	*−88*	−194	*−88*	304	*138*
90 ton (*80.0mt*) 6−sheave hook block at bumper	1,554	*705*	2,358	*1 070*	−804	*−365*	−804	*−365*	2,358	*1 070*
80 ton (*72.5mt*) 5−sheave hook block at bumper	1,406	*638*	2,134	*968*	−728	*−330*	−728	*−330*	2,134	*968*
60 ton (*54.4mt*) 4−sheave hook block at bumper	1,109	*503*	1,683	*763*	−574	*−260*	−574	*−260*	1,683	*763*
10 ton (*9.1mt*) hook ball at bumper	550	*250*	834	*378*	−284	*−129*	−284	*−129*	834	*378*
8.5 ton (*7.7mt*) hook ball at bumper	360	*163*	546	*248*	−186	*−84*	−186	*−84*	546	*248*
90 ton (*80.0mt*) 6−sheave hook block at boom head	1,554	*705*	4,138	*1 877*	−2,584	*−1 172*	−2,584	*−1 172*	4,138	*1 877*
80 ton (*72.5mt*) 5−sheave hook block at boom head	1,406	*638*	3,744	*1 698*	−2,338	*−1 061*	−2,338	*−1 061*	3,744	*1 698*
60 ton (*54.4mt*) 4−sheave hook block at boom head	1,109	*503*	2,953	*1 340*	−1,844	*−836*	−1,844	*−836*	2,953	*1 340*
10 ton (*9.1mt*) hook ball at boom head	550	*250*	1,465	*665*	−915	*−415*	−915	*−415*	1,465	*665*
8.5 ton (*7.7mt*) hook ball at boom head	360	*163*	959	*435*	−599	*−272*	−599	*−272*	959	*435*

Tire	Maximum Allowable Axle Load @ 20 mph (*32.2km/h*)
29.5 x 25 (28−PR)	55,000 lb (*24 948kg*)

(1) Adjust gross vehicle weight and axle loading according to component weight.
Note: All weights are ±3%.

General Dimensions

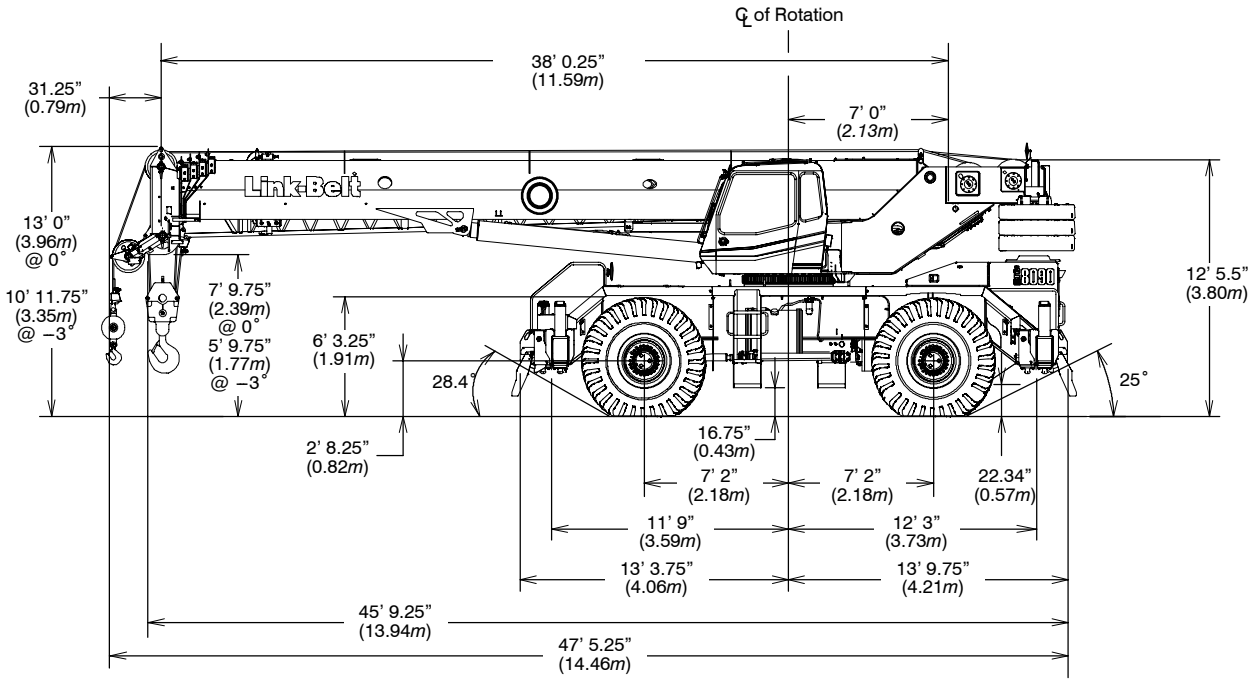

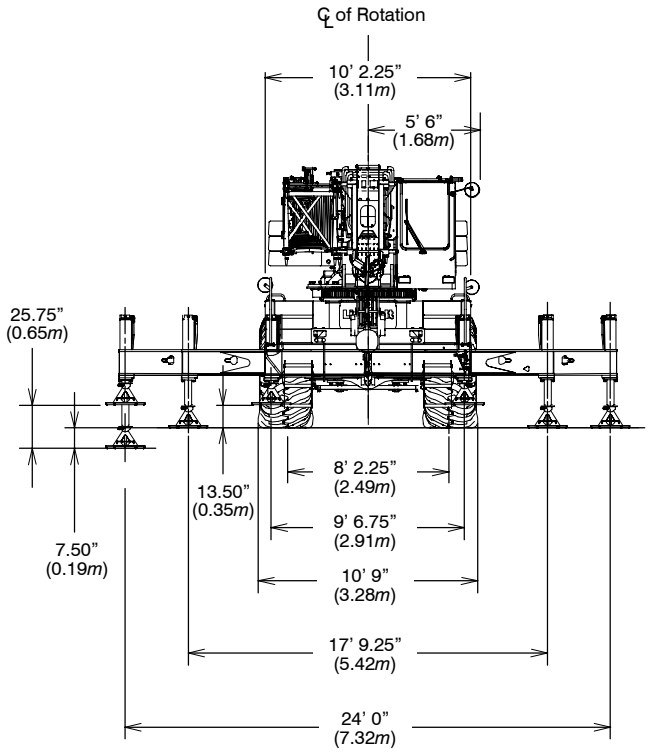

Turning Radius – Front Wheel (4x2) Steering	English	*Metric*
Wall to wall over carrier	48' 3"	*14.71m*
Wall to wall over boom attachment	60' 1"	*18.32m*
Curb to curb	46' 8"	*13.80m*
Centerline of tire	45' 4"	*10.28m*

Turning Radius – All Wheel (4x4) Steering	English	*Metric*
Wall to wall over carrier	27' 10"	*8.49m*
Wall to wall over boom attachment	38' 11"	*11.86m*
Curb to curb	26' 0"	*7.91m*
Centerline of tire	24' 7"	*7.50m*

Tail Swing	English	*Metric*
With counterweight	14' 2"	*4.32m*
Without counterweight	13' 2"	*3.97m*

Not To Scale

This information is for reference use only. Operators manual should be consulted and adhered to.
Please contact CONNELLY CRANE RENTAL at (313) 531-2700 for further information.

Working Range Diagram

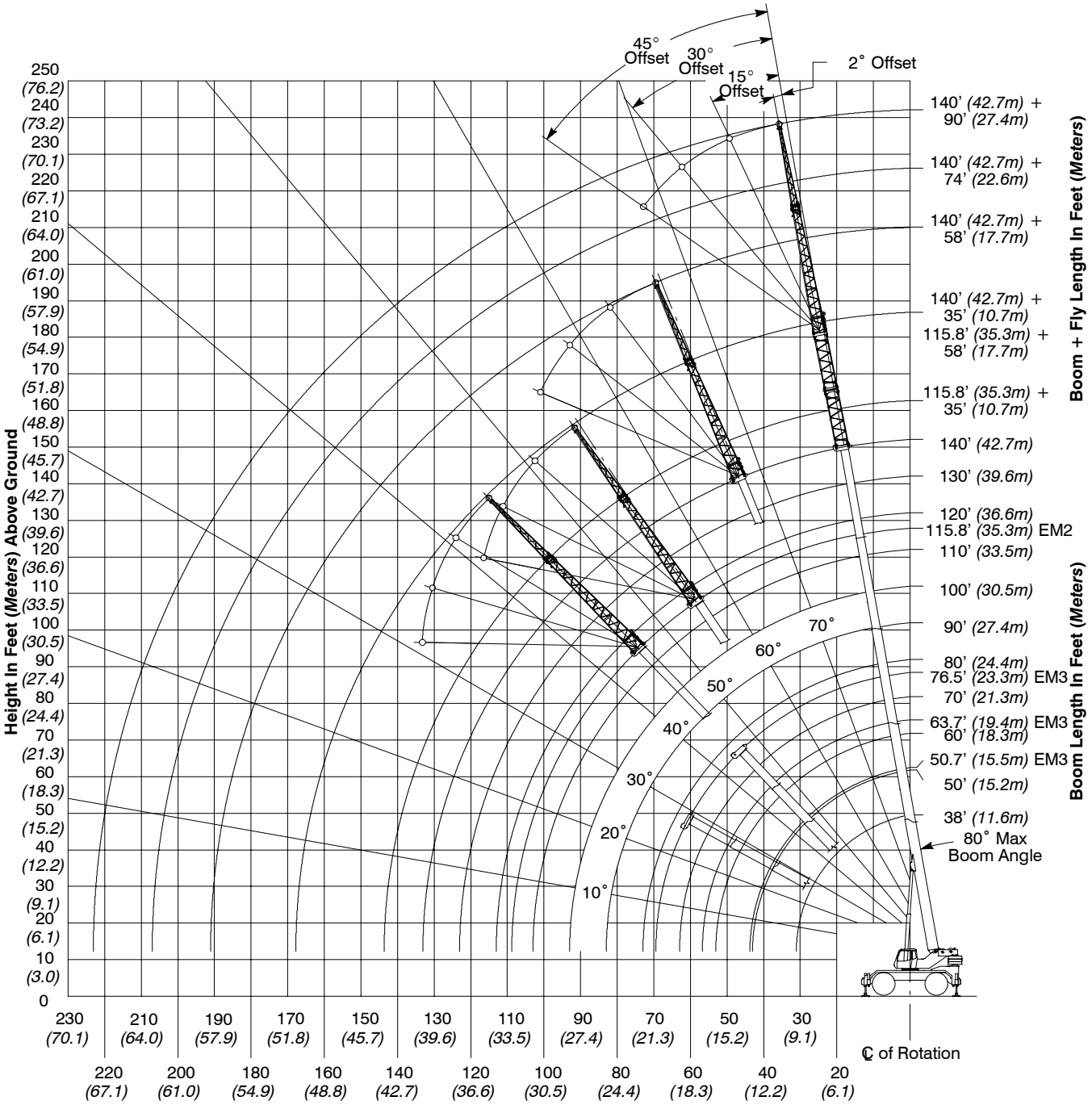

Boom Extend Modes

Boom Length		Section Length			
ft	*m*	T4	T3	T2	T1
50	*15.2*	50%			
60	*18.3*	91%			
70	*21.3*	100%	31%		
80	*24.4*	100%	71%		
90	*27.4*	100%	100%	11%	
100	*30.5*	100%	100%	49%	
110	*33.5*	100%	100%	88%	
120	*36.6*	100%	100%	100%	25%
130	*39.6*	100%	100%	100%	63%
140	*42.7*	100%	100%	100%	100%

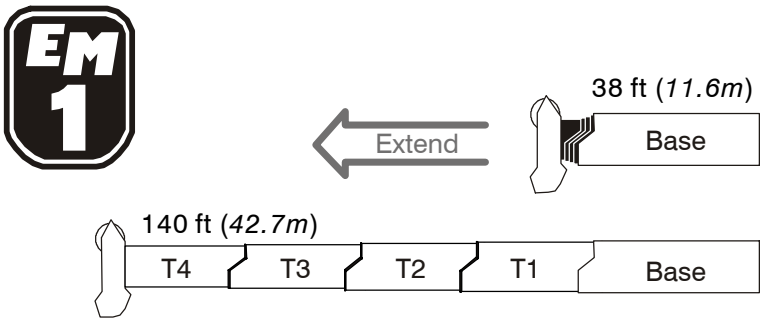

Boom Length		Section Length			
ft	*m*	T4	T3	T2	T1
50	*15.2*	0%	48%		
60	*18.3*	0%	88%		
70	*21.3*	0%	100%	27%	
80	*24.4*	0%	100%	65%	
90	*27.4*	0%	100%	100%	4%
100	*30.5*	0%	100%	100%	41%
115.8	*35.3*	0%	100%	100%	100%

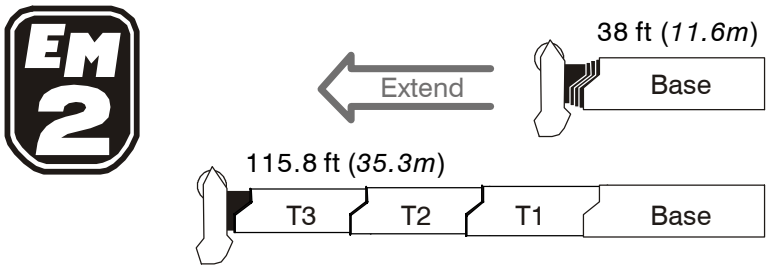

Boom Length		Section Length			
ft	*m*	T4	T3	T2	T1
50.7	*15.5*	0%	51%		
63.7	*19.4*	0%	51%	50%	
76.5	*23.3*	0%	51%	50%	48%

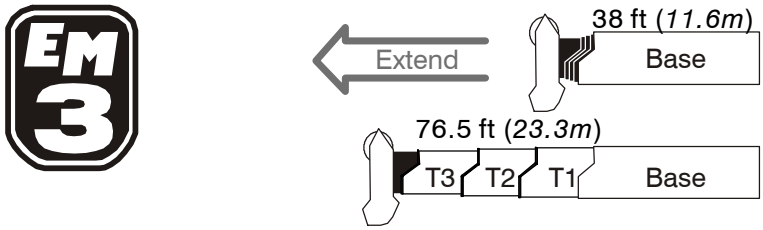

This information is for reference use only. Operators manual should be consulted and adhered to.
Please contact CONNELLY CRANE RENTAL at (313) 531-2700 for further information.

Main Boom Lift Capacity Charts – Standard

19,200 lb Counterweight -- Fully Extended Outriggers -- 360° Rotation
(All Capacities Are Listed In Pounds)

Radius (ft)	Boom Length (ft)											Radius (ft)
	38	50	60	70	80	90	100	110	120	130	140	
8	180,000*											8
10	160,000	152,000	117,900	70,800								10
12	138,000	138,600	108,800	70,800	85,100							12
15	109,500	111,700	106,500	70,800	78,400	54,200						15
20	80,100	82,400	82,800	63,500	76,500	52,000	49,100	27,200				20
25	62,000	64,300	64,800	54,800	64,300	45,600	45,200	36,300	28,000	26,900		25
30	49,700	52,000	52,600	47,800	52,100	40,600	42,200	35,900	28,000	26,500	24,400	30
35		42,900	44,100	42,500	42,800	36,500	38,300	35,500	28,000	26,300	24,100	35
40		34,300	34,600	35,000	35,100	33,000	34,700	33,400	28,000	26,100	24,000	40
45			28,100	28,400	28,500	28,500	28,100	27,500	26,100	25,900	23,800	45
50			23,200	23,600	23,700	23,800	23,300	23,800	24,100	24,600	23,700	50
55			19,000	20,800	21,300	20,000	21,300	21,700	21,300	20,900	20,500	55
60				18,400	18,800	18,300	18,800	18,700	18,300	17,900	17,600	60
65					16,300	16,500	16,400	16,300	15,900	15,500	15,100	65
70					14,300	14,500	14,400	14,300	13,900	13,500	13,200	70
75						12,800	12,800	12,700	12,300	12,000	11,600	75
80						11,400	11,300	11,200	10,900	10,500	10,200	80
85							10,100	10,000	9,700	9,300	9,000	85
90							9,000	8,900	8,600	8,200	7,900	90
95								8,000	7,700	7,300	7,000	95
100								7,100	6,800	6,500	6,200	100
105								4,200	6,100	5,700	5,400	105
110									5,400	5,100	4,700	110
115										4,500	4,200	115
120										3,900	3,600	120
125											3,100	125
130											2,700	130

* Special Conditions Or Wire Rope Required

This information is not for crane operation. Operator must refer to the in–cab information for crane operation. Rated lifting capacities shown on fully extended outriggers do not exceed 85% of the tipping loads and on tires do not exceed 75% of the tipping loads.

This information is for reference use only. Operators manual should be consulted and adhered to.
Please contact CONNELLY CRANE RENTAL at (313) 531-2700 for further information.

19,200 lb Counterweight -- On Tires -- Stationary -- Boom Centered Over Front Between Tire Tracks
(All Capacities Are Listed In Pounds)

Radius (ft)	Boom Length (ft)								Radius (ft)
	38	50	60	70	80	90	100	110	
15	54,700								15
20	43,300								20
25	33,000	36,200							25
30	23,400	26,500	27,900						30
35		20,300	21,700	22,300					35
40		15,900	17,300	17,900	18,300				40
45			14,000	14,700	15,100	15,200			45
50			11,600	12,200	12,600	12,700	12,700		50
55				10,200	10,700	10,900	10,800	10,700	55
60				8,600	9,000	9,200	9,200	9,100	60
65					7,700	7,900	7,800	7,800	65
70					6,600	6,800	6,700	6,700	70
75						5,800	5,800	5,700	75
80						5,000	4,900	4,900	80
85							4,200	4,200	85
90							3,600	3,500	90
95								3,000	95
100								2,500	100

This information is not for crane operation. Operator must refer to the in-cab information for crane operation. Rated lifting capacities shown on fully extended outriggers do not exceed 85% of the tipping loads and on tires do not exceed 75% of the tipping loads.

This information is for reference use only. Operators manual should be consulted and adhered to.
Please contact CONNELLY CRANE RENTAL at (313) 531-2700 for further information.

19,200 lb Counterweight -- On Tires -- Pick & Carry (Creep) -- Boom Centered Over Front
(All Capacities Are Listed In Pounds)

Radius (ft)	Boom Length (ft)								Radius (ft)
	38	50	60	70	80	90	100	110	
15	52,200								15
20	40,100								20
25	31,700	34,100							25
30	23,400	26,500	27,900						30
35		20,300	21,700	22,300					35
40		15,900	17,300	17,900	18,300				40
45			14,000	14,700	15,100	15,200			45
50			11,600	12,200	12,600	12,700	12,700		50
55				10,200	10,700	10,900	10,800	10,700	55
60				8,600	9,000	9,200	9,200	9,100	60
65					7,700	7,900	7,800	7,800	65
70					6,600	6,800	6,700	6,700	70
75						5,800	5,800	5,700	75
80						5,000	4,900	4,900	80
85							4,200	4,200	85
90							3,600	3,500	90
95								3,000	95
100								2,500	100

19,200 lb Counterweight -- On Tires -- Stationary -- 360° Rotation
(All Capacities Are Listed In Pounds)

Radius (ft)	Boom Length (ft)								Radius (ft)
	38	50	60	70	80	90	100	110	
15	33,700								15
20	20,400								20
25	13,200	15,900							25
30	8,700	11,400	12,700						30
35		8,200	9,500	10,200					35
40		5,900	7,200	7,800	8,200				40
45			5,500	6,100	6,500	6,700			45
50			4,100	4,700	5,100	5,300	5,200		50
55				3,600	4,000	4,100	4,100	4,100	55
60				2,700	3,000	3,200	3,200	3,100	60
65					2,300	2,500	2,400	2,400	65
70					1,600	1,800	1,800	1,700	70
75						1,200	1,200	1,100	75

This information is not for crane operation. Operator must refer to the in-cab information for crane operation. Rated lifting capacities shown on fully extended outriggers do not exceed 85% of the tipping loads and on tires do not exceed 75% of the tipping loads.

This information is for reference use only. Operators manual should be consulted and adhered to.
Please contact CONNELLY CRANE RENTAL at (313) 531-2700 for further information.

28,800 lb Counterweight -- Fully Extended Outriggers -- 360° Rotation
(All Capacities Are Listed In Pounds)

Radius (ft)	Boom Length (ft)											Radius (ft)
	38	50	60	70	80	90	100	110	120	130	140	
8	167,200											8
10	155,800	152,000	117,900	70,800								10
12	139,600	138,600	108,800	70,800	85,100							12
15	116,300	118,400	106,500	70,800	78,400	54,200						15
20	85,300	87,500	87,900	63,500	76,500	52,000	49,100	27,200				20
25	66,200	68,500	69,000	54,800	68,500	45,600	45,200	36,300	28,000	26,900		25
30	53,200	55,500	56,100	47,800	55,700	40,600	42,200	35,900	28,000	26,500	24,400	30
35		46,200	46,800	42,500	46,400	36,500	38,300	35,500	28,000	26,300	24,100	35
40		39,600	40,100	38,100	39,300	33,000	34,900	33,400	28,000	26,100	24,000	40
45			34,200	34,500	33,800	30,100	32,100	30,300	26,100	25,900	23,800	45
50			28,500	28,900	28,900	27,600	28,500	27,900	24,100	25,200	23,700	50
55			23,700	24,600	24,700	24,700	24,300	23,800	22,300	23,500	23,600	55
60				21,100	21,200	21,300	20,900	20,400	20,700	21,900	21,700	60
65					18,500	18,500	18,600	18,900	19,300	19,300	18,900	65
70					17,300	16,200	17,500	17,700	17,400	17,000	16,600	70
75						14,900	15,900	15,700	15,400	15,000	14,700	75
80						14,100	14,200	14,100	13,700	13,400	13,000	80
85							12,800	12,700	12,400	12,000	11,700	85
90							11,600	11,500	11,200	10,800	10,500	90
95								10,400	10,100	9,700	9,400	95
100								9,400	9,100	8,700	8,400	100
105								6,300	8,200	7,900	7,600	105
110									7,400	7,100	6,800	110
115										6,400	6,100	115
120										5,800	5,500	120
125											4,900	125
130											4,400	130

This information is not for crane operation. Operator must refer to the in-cab information for crane operation. Rated lifting capacities shown on fully extended outriggers do not exceed 85% of the tipping loads and on tires do not exceed 75% of the tipping loads.

This information is for reference use only. Operators manual should be consulted and adhered to.
Please contact CONNELLY CRANE RENTAL at (313) 531-2700 for further information.

Fly Attachment Lift Capacity Charts – Optional

19,200 lb Counterweight – Fully Extended Outriggers – 360° Rotation
(All Capacities Are Listed In Pounds)

140 ft Main Boom Length 2° Fly Offset					140 ft Main Boom Length 15° Fly Offset				
Radius (ft)	Fly Length (ft)				Radius (ft)	Fly Length (ft)			
	35	58	74	90		35	58	74	90
35	12,100				35				
40	12,100				40				
45	12,100	8,500			45	11,500			
50	12,100	8,400	6,600		50	11,400			
55	12,100	8,300	6,600	5,200	55	11,200			
60	12,100	8,100	6,600	5,200	60	11,000	7,200		
65	11,900	8,000	6,600	5,200	65	10,800	7,000	6,300	
70	11,700	7,800	6,600	5,200	70	10,600	6,800	6,000	4,800
75	11,500	7,700	6,600	5,100	75	10,400	6,700	5,700	4,500
80	10,900	7,500	6,400	4,800	80	10,200	6,500	5,400	4,200
85	9,600	7,300	6,000	4,500	85	10,000	6,300	5,100	4,000
90	8,500	7,100	5,700	4,200	90	9,100	6,200	4,900	3,700
95	7,600	6,900	5,400	4,000	95	8,100	6,000	4,600	3,500
100	6,700	6,700	5,100	3,700	100	7,200	5,900	4,400	3,300
105	6,000	6,400	4,900	3,500	105	6,400	5,700	4,200	3,100
110	5,300	5,700	4,700	3,300	110	5,700	5,600	4,100	3,000
115	4,700	5,100	4,500	3,200	115	5,000	5,500	3,900	2,800
120	4,100	4,500	4,300	3,000	120	4,400	5,100	3,700	2,700
125	3,600	4,000	3,900	2,800	125	3,900	4,500	3,600	2,500
130	3,100	3,600	3,500	2,700	130	3,400	4,000	3,500	2,400
135	2,700	3,100	3,000	2,500	135	3,000	3,600	3,300	2,300
140	2,300	2,700	2,600	2,400	140	2,500	3,100	3,000	2,200
145	2,000	2,400	2,300	2,200	145	2,200	2,700	2,600	2,100
150	1,700	2,000	1,900	1,900	150	1,800	2,400	2,200	2,000
155	1,400	1,700	1,600	1,600	155	1,500	2,000	1,900	1,900
160	1,100	1,400	1,300	1,300	160	1,200	1,700	1,600	1,600
165	800	1,200	1,000	1,000	165	900	1,400	1,300	1,300
170		900			170		1,100	1,000	1,000

This information is not for crane operation. Operator must refer to the in–cab information for crane operation. Rated lifting capacities shown on fully extended outriggers do not exceed 85% of the tipping loads and on tires do not exceed 75% of the tipping loads.

This information is for reference use only. Operators manual should be consulted and adhered to.
Please contact CONNELLY CRANE RENTAL at (313) 531-2700 for further information.

19,200 lb Counterweight -- Fully Extended Outriggers -- 360° Rotation
(All Capacities Are Listed In Pounds)

140 ft Main Boom Length 30° Fly Offset					140 ft Main Boom Length 45° Fly Offset				
Radius (ft)	Fly Length (ft)				Radius (ft)	Fly Length (ft)			
	35	58	74	90		35	58	74	90
40					40				
45					45				
50					50				
55	10,000				55				
60	9,800				60				
65	9,700				65	8,800			
70	9,500				70	8,800			
75	9,400	5,700	4,600		75	8,700			
80	9,200	5,600	4,400	3,600	80	8,600			
85	9,100	5,500	4,200	3,400	85	8,600	4,900	3,700	
90	9,000	5,400	4,100	3,200	90	8,500	4,900	3,500	2,900
95	8,500	5,300	3,900	3,000	95	8,400	4,800	3,400	2,700
100	7,600	5,200	3,700	2,900	100	7,900	4,800	3,300	2,600
105	6,800	5,100	3,600	2,700	105	7,000	4,700	3,200	2,400
110	6,000	5,000	3,500	2,600	110	6,200	4,700	3,100	2,300
115	5,300	4,900	3,300	2,400	115	5,500	4,700	3,000	2,200
120	4,700	4,800	3,200	2,300	120	4,900	4,600	2,900	2,100
125	4,100	4,700	3,100	2,200	125	4,300	4,500	2,800	2,000
130	3,600	4,500	3,000	2,100	130	3,700	4,400	2,700	1,900
135	3,100	4,000	2,900	2,000	135	3,200	4,300	2,700	1,800
140	2,700	3,500	2,800	1,900	140		3,700	2,600	1,800
145	2,300	3,100	2,800	1,800	145		3,300	2,600	1,700
150	1,900	2,700	2,600	1,700	150		2,800	2,500	1,600
155	1,500	2,300	2,200	1,700	155		2,400	2,400	1,600
160		1,900	1,900	1,600	160		2,000	2,100	1,500
165		1,600	1,500	1,500	165			1,700	1,500
170		1,300	1,200	1,300	170			1,300	1,400
175		900	900	1,000	175				1,100

This information is not for crane operation. Operator must refer to the in-cab information for crane operation. Rated lifting capacities shown on fully extended outriggers do not exceed 85% of the tipping loads and on tires do not exceed 75% of the tipping loads.

This information is for reference use only. Operators manual should be consulted and adhered to.
Please contact CONNELLY CRANE RENTAL at (313) 531-2700 for further information.

28,800 lb Counterweight -- Fully Extended Outriggers -- 360° Rotation
(All Capacities Are Listed In Pounds)

140 ft Main Boom Length 2° Fly Offset					140 ft Main Boom Length 15° Fly Offset				
Radius (ft)	Fly Length (ft)				Radius (ft)	Fly Length (ft)			
	35	58	74	90		35	58	74	90
35	12,100				35				
40	12,100				40				
45	12,100	8,500			45	11,500			
50	12,100	8,400	6,600		50	11,400			
55	12,100	8,300	6,600	5,200	55	11,200			
60	12,100	8,100	6,600	5,200	60	11,000	7,200		
65	11,900	8,000	6,600	5,200	65	10,800	7,000	6,300	
70	11,700	7,800	6,600	5,200	70	10,600	6,800	6,000	4,800
75	11,500	7,700	6,600	5,100	75	10,400	6,700	5,700	4,500
80	11,300	7,500	6,400	4,800	80	10,200	6,500	5,400	4,200
85	11,000	7,300	6,000	4,500	85	10,000	6,300	5,100	4,000
90	10,500	7,100	5,700	4,200	90	9,700	6,200	4,900	3,700
95	10,000	6,900	5,400	4,000	95	9,400	6,000	4,600	3,500
100	9,000	6,700	5,100	3,700	100	9,000	5,900	4,400	3,300
105	8,100	6,500	4,900	3,500	105	8,500	5,700	4,200	3,100
110	7,300	6,300	4,700	3,300	110	7,700	5,600	4,100	3,000
115	6,600	6,000	4,500	3,200	115	7,000	5,500	3,900	2,800
120	6,000	5,800	4,300	3,000	120	6,300	5,300	3,700	2,700
125	5,400	5,600	4,100	2,800	125	5,700	5,100	3,600	2,500
130	4,800	5,300	3,900	2,700	130	5,100	4,900	3,500	2,400
135	4,400	4,800	3,800	2,500	135	4,600	4,700	3,300	2,300
140	3,900	4,300	3,600	2,400	140	4,100	4,600	3,200	2,200
145	3,500	3,900	3,500	2,300	145	3,700	4,200	3,100	2,100
150	3,100	3,500	3,400	2,200	150	3,300	3,800	3,000	2,000
155	2,700	3,100	3,000	2,100	155	2,900	3,400	2,900	1,900
160	2,400	2,800	2,600	2,000	160	2,500	3,100	2,800	1,800
165	2,100	2,500	2,300	1,900	165	2,200	2,700	2,600	1,700
170		2,200	2,000	1,800	170		2,400	2,300	1,600
175		1,900	1,800	1,700	175		2,100	2,000	1,600
180		1,700	1,500	1,500	180		1,800	1,700	1,500
185		1,400	1,200	1,200	185		1,500	1,400	1,400
190		1,200	1,000	1,000	190			1,200	1,200
195					195			900	900

This information is not for crane operation. Operator must refer to the in-cab information for crane operation. Rated lifting capacities shown on fully extended outriggers do not exceed 85% of the tipping loads and on tires do not exceed 75% of the tipping loads.

This information is for reference use only. Operators manual should be consulted and adhered to.
Please contact CONNELLY CRANE RENTAL at (313) 531-2700 for further information.

28,800 lb Counterweight -- Fully Extended Outriggers -- 360° Rotation
(All Capacities Are Listed In Pounds)

140 ft Main Boom Length 30° Fly Offset					140 ft Main Boom Length 45° Fly Offset				
Radius (ft)	Fly Length (ft)				Radius (ft)	Fly Length (ft)			
	35	58	74	90		35	58	74	90
40					40				
45					45				
50					50				
55	10,000				55				
60	9,800				60				
65	9,700				65	8,800			
70	9,500				70	8,800			
75	9,400	5,700	4,600		75	8,700			
80	9,200	5,600	4,400	3,600	80	8,600			
85	9,100	5,500	4,200	3,400	85	8,600	4,900	3,700	
90	9,000	5,400	4,100	3,200	90	8,500	4,900	3,500	2,900
95	8,800	5,300	3,900	3,000	95	8,400	4,800	3,400	2,700
100	8,500	5,200	3,700	2,900	100	8,200	4,800	3,300	2,600
105	8,200	5,100	3,600	2,700	105	8,000	4,700	3,200	2,400
110	8,000	5,000	3,500	2,600	110	7,700	4,700	3,100	2,300
115	7,300	4,900	3,300	2,400	115	7,500	4,700	3,000	2,200
120	6,600	4,800	3,200	2,300	120	6,700	4,600	2,900	2,100
125	5,900	4,700	3,100	2,200	125	6,000	4,500	2,800	2,000
130	5,300	4,500	3,000	2,100	130	5,400	4,400	2,700	1,900
135	4,800	4,400	2,900	2,000	135	4,800	4,300	2,700	1,800
140	4,300	4,300	2,800	1,900	140		4,200	2,600	1,800
145	3,800	4,200	2,800	1,800	145		4,100	2,600	1,700
150	3,300	4,100	2,700	1,700	150		4,000	2,500	1,600
155	2,900	3,700	2,600	1,700	155		3,800	2,500	1,600
160		3,300	2,600	1,600	160		3,300	2,500	1,500
165		2,900	2,500	1,500	165		2,900	2,500	1,500
170		2,500	2,500	1,500	170			2,500	1,400
175		2,200	2,200	1,400	175			2,200	1,400
180		1,800	1,800	1,400	180				1,400
185			1,500	1,400	185				1,400
190			1,300	1,300	190				1,400
195			1,000	1,100	195				

This information is not for crane operation. Operator must refer to the in-cab information for crane operation. Rated lifting capacities shown on fully extended outriggers do not exceed 85% of the tipping loads and on tires do not exceed 75% of the tipping loads.

This information is for reference use only. Operators manual should be consulted and adhered to.
Please contact CONNELLY CRANE RENTAL at (313) 531-2700 for further information.

Main Boom Lift Capacity Charts – Metric

8 709kg Counterweight -- Fully Extended Outriggers -- 360˚ Rotation
(All Capacities Are Listed In Kilograms)

Radius (m)	Boom Length (m)											Radius (m)
	11.58	15.24	18.29	21.34	24.38	27.43	30.48	33.53	36.58	39.62	42.67	
2.5												2.5
3												3
3.5												3.5
4												4
4.5												4.5
5												5
6												6
7												7
8												8
9												9
10												10
12												12
14												14
16												16
18												18
20												20
22												22
24												24
26												26
28												28
30												30
32												32
34												34
36												36
38												38
40												40
42												42

This information is not for crane operation. Operator must refer to the in–cab information for crane operation. Rated lifting capacities shown on fully extended outriggers do not exceed 75% of the tipping loads and on tires do not exceed 65% of the tipping loads.

This information is for reference use only. Operators manual should be consulted and adhered to.
Please contact CONNELLY CRANE RENTAL at (313) 531-2700 for further information.

8 709kg Counterweight -- On Tires -- Stationary -- Boom Centered Over Front Between Tire Tracks

(All Capacities Are Listed In Kilograms)

Radius (m)	Boom Length (m)							Radius (m)
	11.58	15.24	18.29	21.34	24.38	27.43	30.48	
3								3
3.5								3.5
4								4
4.5								4.5
5								5
6								6
7								7
8								8
9								9
10								10
12								12
14								14
16								16
18								18
20								20
22								22
24								24
26								26
28								28

This information is not for crane operation. Operator must refer to the in-cab information for crane operation. Rated lifting capacities shown on fully extended outriggers do not exceed 75% of the tipping loads and on tires do not exceed 65% of the tipping loads.

This information is for reference use only. Operators manual should be consulted and adhered to.
Please contact CONNELLY CRANE RENTAL at (313) 531-2700 for further information.

8 709kg Counterweight -- On Tires -- Pick & Carry (Creep) -- Boom Centered Over Front
(All Capacities Are Listed In Kilograms)

Radius (m)	Boom Length (m)							Radius (m)
	11.58	15.24	18.29	21.34	24.38	27.43	30.48	
3								3
3.5								3.5
4								4
4.5								4.5
5								5
6								6
7								7
8								8
9								9
10								10
12								12
14								14
16								16
18								18
20								20
22								22
24								24
26								26
28								28

8 709kg Counterweight -- On Tires -- Stationary -- 360° Rotation
(All Capacities Are Listed In Kilograms)

Radius (m)	Boom Length (m)							Radius (m)
	11.58	15.24	18.29	21.34	24.38	27.43	30.48	
3								3
3.5								3.5
4								4
4.5								4.5
5								5
6								6
7								7
8								8
9								9
10								10
12								12
14								14
16								16
18								18
20								20

This information is not for crane operation. Operator must refer to the in-cab information for crane operation. Rated lifting capacities shown on fully extended outriggers do not exceed 75% of the tipping loads and on tires do not exceed 65% of the tipping loads.

This information is for reference use only. Operators manual should be consulted and adhered to.
Please contact CONNELLY CRANE RENTAL at (313) 531-2700 for further information.

13 064kg Counterweight -- Fully Extended Outriggers -- 360° Rotation
(All Capacities Are Listed In Kilograms)

Radius (m)	Boom Length (m)											Radius (m)
	11.58	15.24	18.29	21.34	24.38	27.43	30.48	33.53	36.58	39.62	42.67	
2.5												2.5
3												3
3.5												3.5
4												4
4.5												4.5
5												5
6												6
7												7
8												8
9												9
10												10
12												12
14												14
16												16
18												18
20												20
22												22
24												24
26												26
28												28
30												30
32												32
34												34
36												36
38												38
40												40

This information is not for crane operation. Operator must refer to the in-cab information for crane operation. Rated lifting capacities shown on fully extended outriggers do not exceed 75% of the tipping loads and on tires do not exceed 65% of the tipping loads.

This information is for reference use only. Operators manual should be consulted and adhered to.
Please contact CONNELLY CRANE RENTAL at (313) 531-2700 for further information.

Fly Attachment Lift Capacity Charts – Optional

8 709kg Counterweight -- Fully Extended Outriggers – 360˚ Rotation
(All Capacities Are Listed In Kilograms)

42.67m Main Boom Length 2˚ Fly Offset					42.67m Main Boom Length 15˚ Fly Offset				
Radius (m)	Fly Length (m)				Radius (m)	Fly Length (m)			
	10.67	17.68	22.56	27.43		10.67	17.68	22.56	27.43
12					12				
14					14				
16					16				
18					18				
20					20				
22					22				
24					24				
26					26				
28					28				
30					30				
32					32				
34					34				
36					36				
38					38				
40					40				
42					42				
44					44				
46					46				
48					48				

This information is not for crane operation. Operator must refer to the in–cab information for crane operation. Rated lifting capacities shown on fully extended outriggers do not exceed 75% of the tipping loads and on tires do not exceed 65% of the tipping loads.

8 709kg Counterweight -- Fully Extended Outriggers -- 360˚ Rotation
(All Capacities Are Listed In Kilograms)

42.67m Main Boom Length 30˚ Fly Offset					42.67m Main Boom Length 45˚ Fly Offset				
Radius (m)	Fly Length (m)				Radius (m)	Fly Length (m)			
	10.67	17.68	22.56	27.43		10.67	17.68	22.56	27.43
18					18				
20					20				
22					22				
24					24				
26					26				
28					28				
30					30				
32					32				
34					34				
36					36				
38					38				
40					40				
42					42				
44					44				
46					46				
48					48				

This information is not for crane operation. Operator must refer to the in-cab information for crane operation. Rated lifting capacities shown on fully extended outriggers do not exceed 75% of the tipping loads and on tires do not exceed 65% of the tipping loads.

This information is for reference use only. Operators manual should be consulted and adhered to.
Please contact CONNELLY CRANE RENTAL at (313) 531-2700 for further information.

13 064kg Counterweight -- Fully Extended Outriggers -- 360˚ Rotation
(All Capacities Are Listed In Kilograms)

42.67m Main Boom Length 2˚ Fly Offset					42.67m Main Boom Length 15˚ Fly Offset				
Radius (m)	Fly Length (m)				Radius (m)	Fly Length (m)			
	10.67	17.68	22.56	27.43		10.67	17.68	22.56	27.43
12					12				
14					14				
16					16				
18					18				
20					20				
22					22				
24					24				
26					26				
28					28				
30					30				
32					32				
34					34				
36					36				
38					38				
40					40				
42					42				
44					44				
46					46				
48					48				
50					50				
52					52				
54					54				
56					56				
58					58				
60					60				

This information is not for crane operation. Operator must refer to the in-cab information for crane operation. Rated lifting capacities shown on fully extended outriggers do not exceed 75% of the tipping loads and on tires do not exceed 65% of the tipping loads.

This information is for reference use only. Operators manual should be consulted and adhered to.
Please contact CONNELLY CRANE RENTAL at (313) 531-2700 for further information.

13 064kg Counterweight -- Fully Extended Outriggers -- 360° Rotation
(All Capacities Are Listed In Kilograms)

42.67m Main Boom Length 30° Fly Offset					42.67m Main Boom Length 45° Fly Offset				
Radius (m)	Fly Length (m)				Radius (m)	Fly Length (m)			
	10.67	17.68	22.56	27.43		10.67	17.68	22.56	27.43
18					18				
20					20				
22					22				
24					24				
26					26				
28					28				
30					30				
32					32				
34					34				
36					36				
38					38				
40					40				
42					42				
44					44				
46					46				
48					48				
50					50				
52					52				
54					54				
56					56				
58					58				
60					60				

This information is not for crane operation. Operator must refer to the in-cab information for crane operation. Rated lifting capacities shown on fully extended outriggers do not exceed 75% of the tipping loads and on tires do not exceed 65% of the tipping loads.

This information is for reference use only. Operators manual should be consulted and adhered to.
Please contact CONNELLY CRANE RENTAL at (313) 531-2700 for further information.